Basic Series Circuits

Using Figure 1, Find the following:

A) The total loop resistance R_T.

B) The total current I_T.

C) The voltage drop across each resistor ***(use Ohm's Law)*** Prove that Kirchhoff's Law has been met.
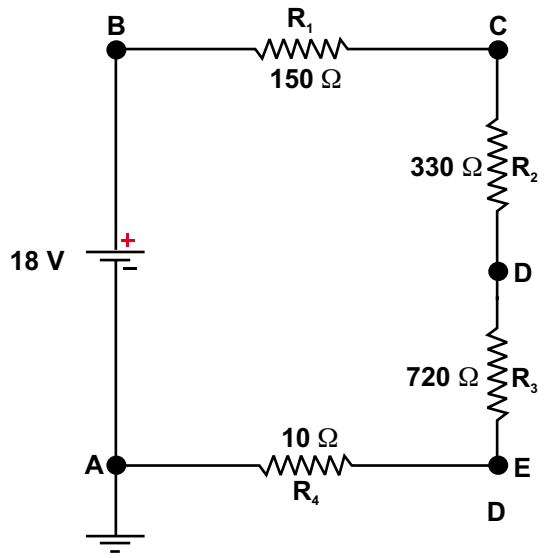
D) Calculate V_B, V_C, V_D, V_E